Provisional data

Farnell

multi-output power supplies–MOPS

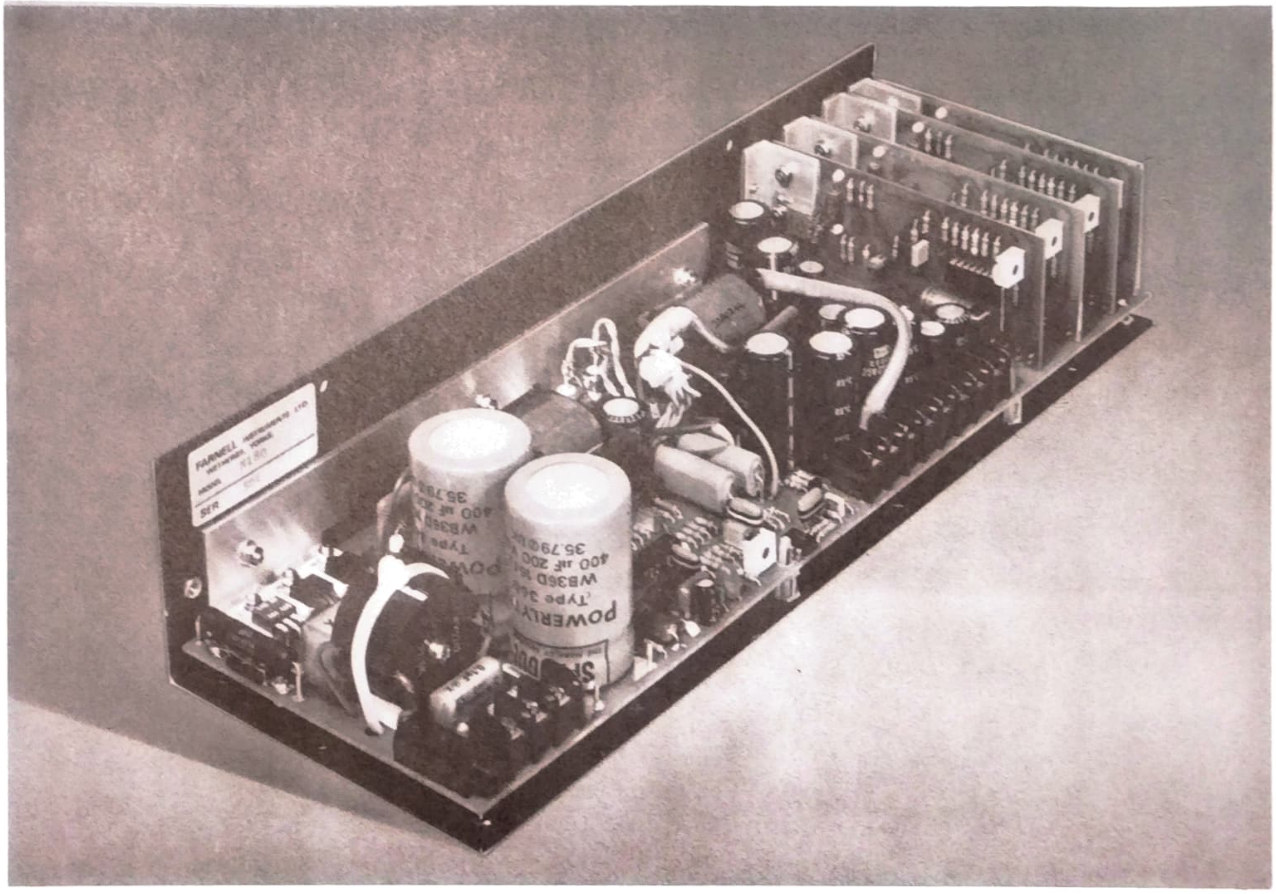

● **Switched-mode technique for compactness and high efficiency** ● **Open frame construction (optional cover)** ● **Standard models have five outputs: ±5V; ±12V and +24V d.c.** ● **Alternative outputs to order** ● **160 and 180 watt units (other versions soon)** ● **Foldback current limit protection on all outputs** ● **Soft start limits in-rush current** ● **18mS minimum hold-up time** ● **Convection cooled** ● **Simplified mounting in any plane** ● **R.F.I. suppression to BS800 and VDE 0875 curve N** ● **Design and construction in accordance with UL478 and BPO Technical Guides 2 and 26 (sections 1.3, 1.3.1 and 2.5.1 respectively)** ● **British design and manufacture** ● **Tailored versions and custom designs to order**

Applications:

● **Computers** ● **Logic systems** ● **Mini and micro computers** ● **Computer peripherals: terminals, floppy disc drives etc.** ● **Microprocessor systems** ● **Business machines**

Farnell introduce MOPS (multi-output power supplies) in economy open frame packages for OEM use in microprocessor systems, computers and peripherals, and business machines.

Using switched-mode rather than linear techniques, MOPS are small, easily mounted and highly efficient. They run cooler than linear units and do not require fans. An optional cover is available.

160 watts (regulated) and 180 watts (semi-regulated) standard units with five outputs are currently in production and other models are in the late design stage. The standard outputs are ±5V; ±12V and +24V d.c. but alternatives can be had to order.

Soft start circuitry limits in-rush current and at least 18 mS hold-up time is provided. R.F.I. suppression is to BS800 and VDE 0875 curve N. Designed and constructed in accordance with UL478 and BPO standards, MOPS are of British design and manufacture but will second source some North American and European models.

Farnell have nearly 25 years expertise in power supplies and almost a decade's experience in volume production of switched-mode units. With two superb production plants located at Wetherby (67,000 ft^2) and Boroughbridge (23,000 ft^2) plus its own transformer manufacturing unit at Bishop Auckland, Farnell are capable of high volume, contract work to DEF 0524 standards and regularly supply off-the-shelf models, tailored versions and custom designs to many internationally known companies. There are sales/service departments in Wetherby and Harpenden, subsidiary companies in France and Italy and a European distribution network exists to fully support the multi-national OEM production line.

Specification

Mains input 220 to 240V or 115 to 120V set by link on circuit board. 45 to 440Hz

Mains variation tolerated 220 − 20% to 240 + 10% (176 to 264V) or 115 − 20% to 120 + 10% (92 to 132V)

Outputs

	V nom.	I max.	N160R*	N180*
Output 1	+5V	20A	Regulated	Regulated
Output 2	+12V	5A	Regulated	Semi-regulated
Output 3	−12V	5A	Regulated	Semi-regulated
Output 4	+24V	2A	Regulated	Semi-regulated
Output 5	−5V	1A	Regulated	Semi-regulated

* 160 watts total max. power (N160R)
* 180 watts total max. power (N180)

Voltage adjustment Output 1: 4.75V to 5.25V
Outputs 2-5: ±5% approx. (N160R)
Note: Model N160R has adjustment pots. on all outputs. Only output 1 can be adjusted on N180 and outputs 2-5 will vary in proportion

Ripple and noise

N160R model	Less than 50mV pk-pk all outputs (Δf = 30MHz)
N180 model	2% max. pk-pk 40mV max. r.m.s.

Temperature coefficient

N160R model	±0.02% per °C typical, all outputs
N180 model	Output 1 ±0.02% per °C typical Outputs 2-5 ±0.05% per °C typical

Operating ambient temperature range 0°C to +50°C for full output current rating. Convection cooled. No additional heatsink needed

Maximum operating ambient temperature All outputs and total maximum power output derate linearly from I max. and Po max. to half I max. and half Po max. respectively at 70°C

Output voltage regulation

N160R model	±1% max. deviation (including sum effect of line, load and cross regulation)
N180 model	
Line regulation	All outputs 0.2% max. deviation for mains variation of 198 to 264V or 103 to 132V
Load regulation	Output 1 ±1% max. deviation Output 2 ±3% max. deviation Output 3 ±2% max. deviation Output 4 ±2% max. deviation Output 5 ±2.5% max. deviation (for ±40% load change from 60% I max. on considered output only)
Cross regulation (measured output set at 20% max. rated load)	Output 1 ±0.5% max. deviation (for ±25% change from 75% I max. on any output) Outputs 2-5 ±1.5% max. deviation (for ±25% change from 75% I max. on output 1) ±0.5% max. deviation (for ±25% change from 75% I max. on any output except 1)

Switch on surge Soft start limited to 16A max. peak current

Insulation Unit isolation barriers (input to output) including layout and wiring are designed to meet a test of: 4kV r.m.s. for 1 minute input to output (i.e. 2kV r.m.s. input to earth, 2kV r.m.s. output to earth)
Appropriate tests applied to all relevant components to ensure compliance with BS3535 clause 17B and CEE15 clause 17c.
The complete unit is tested at 2.1kV d.c. for 1 minute between a.c. input and d.c. output with output terminals and earth connected together. Tested to 500V d.c. for 1 minute, output to earth

Storage temperature range −25°C to +85°C

Hold-up time 18mS minimum. Output will be maintained for the duration of a missing half mains cycle at maximum output power and 220V −10% or 115V −10% mains input

Safety specifications Designed and manufactured in accordance with UL478 and BPO Technical Guides 2 and 26 (sections 1.3, 1.3.1 and 2.5.1 respectively)

Protection
Overload: Self resetting foldback current limiting on all outputs (N160R) and on output 1 only on N180 model. Overall power output limited to approx. 120% of full rated output
Overvoltage: Available as standard on all 5 outputs (N160R)
5V outputs – operates at 5.8V min, 7V max.
12V outputs – operates at 13V min, 16V max.
24V output – operates at 26V min, 30V max.
Model N180 has overvoltage protection on output 1 only

Radio frequency interference
Units comply with the conducted interference requirements of VDE 0875 curve N and BS800

Efficiency N180 80% typical, N160R 70% typical

Dimensions/weight

	N160R	N180	
Height	72mm	72mm	
Width	121.6mm	121.6mm	±0.5mm
Depth	345mm	266.5mm	
Weight	2.0 kg	1.4 kg	

Cover Optionally available

Connections Slotted screw terminals on barrier strips. 3 way barrier strip for supply input. Separate barrier strip for outputs

Mechanical details

N160R model

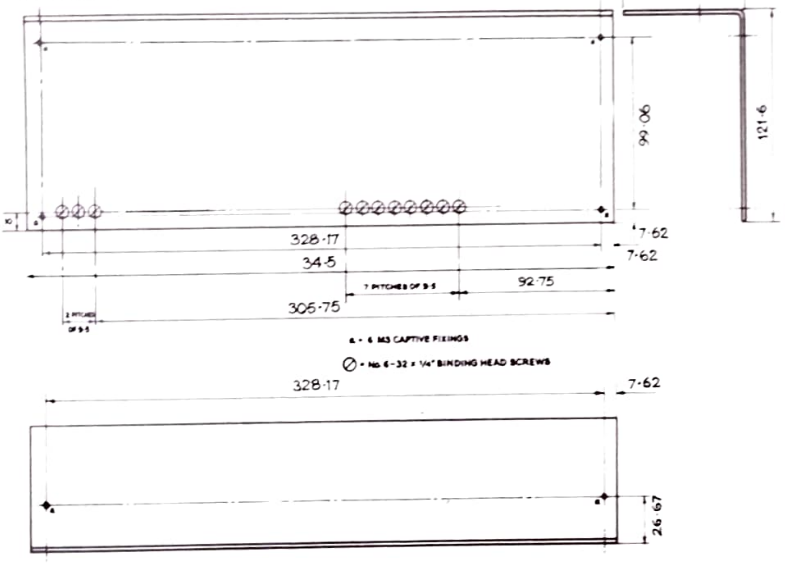

N180 model

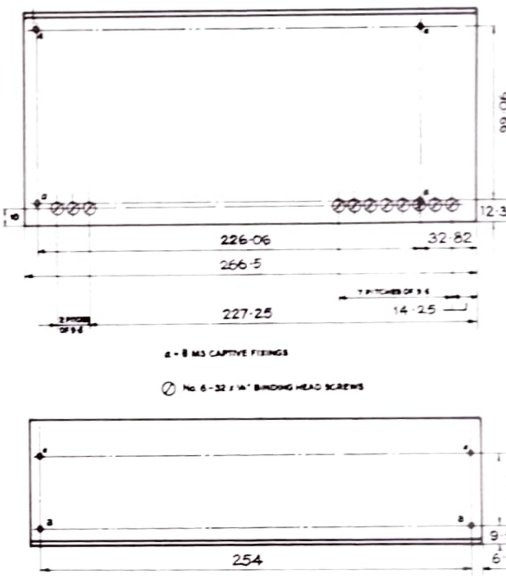

Represented overseas by:

Manufactured in England by:

Farnell

FARNELL INSTRUMENTS LIMITED
SANDBECK WAY · WETHERBY
WEST YORKSHIRE LS22 4DH
TELEPHONE (0937) 61961
TELEX 557294 FARIST G

REGIONAL OFFICE (SOUTH)
TELEPHONE: HARPENDEN (05827) 69071
TELEX: 826307 FARINT G

Printed in England. 9·80

We reserve the right to amend specifications without notification.

SCHEMATIC DIAGRAM

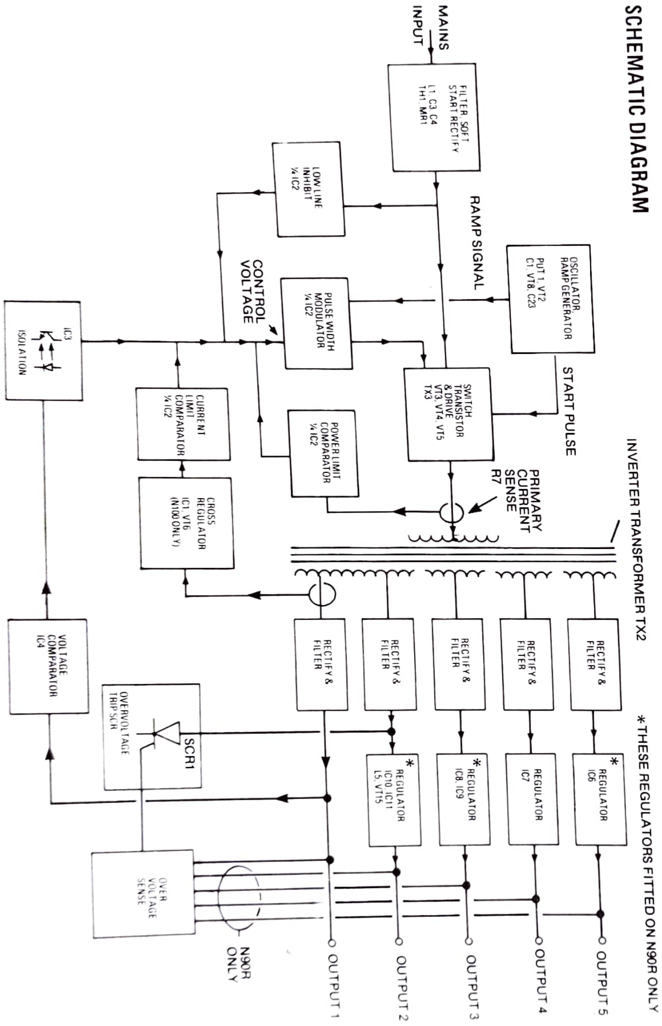

MOPS-N90R,N100 BLOCK DIAGRAM

OPERATING INSTRUCTIONS FOR

Farnell

MOPS-OPEN FRAME MULTI-OUTPUT

POWER SUPPLIES N90R & N100

INTRODUCTION

The Farnell MOPS range of multiple output switching power supplies provide the microprocessor user with an economic and efficient power source for his whole equipment. A single unit can provide five d.c. output voltages which are suitable for powering peripheral display, storage and input devices as well as the processor and memory.

This instruction sheet describes units based on the N100 and N90R systems which can deliver 100 watts and 90 watts total output power respectively. The N90R has all outputs fully regulated and the N100 has two fully regulated outputs with the others semi-regulated.

The standard outputs are +5V, +12V, -12V, +24V and -5V but many other combinations of voltage to suit particular applications can be manufactured to special order. These units are of open frame construction for incorporation inside other equipment and an optional cover is available.

The units may be operated from a.c. supply voltages of 115V and 230V nominal and are designed to meet several international specifications - UL478, BS800, VDE0875, CEE15.

SPECIFICATION

VARIATIONS FROM THIS SPECIFICATION FOR NON-STANDARD UNITS ARE INDICATED ON THE REVERSE OF THIS SHEET. ALL VALUES SPECIFIED FOR AN AMBIENT TEMPERATURE OF 25°C UNLESS OTHERWISE INDICATED.

Mains input 176 to 264V a.c. r.m.s. on 230V tap
92 to 132V a.c. r.m.s. on 115V tap. Selected by link on circuit board. Frequency 45 to 440Hz. 250 to 370V d.c. on 230V tap only.

Input current (at full load typical)

	115V	220V	240V
R.M.S.	1.8A	1.1A	1.0A
MEAN	930mA	470mA	440mA
REPETITIVE PEAK	2.2A	3.6A	3.5A

Switch on surge 11A max. peak current cold start

Standard outputs (N100/F4108 and N90R/F4109 only)
If unit is non standard refer to reverse of this sheet for output voltage and currents.

	Voltage (nominal)	Current (maximum)
Output 1	+5V	10A
Output 2	+12V	5A
Output 3	-12V	2A
Output 4	-5V	1A
Output 5	+24V	2A N100, 1A, N90R

Maximum output power N100 unit - 100 watts total. N90R unit 90 watts total. Note: it is necessary to derate the maximum current taken from one or more of the outputs to restrict the output power to the above figures.

Output voltage adjustment N90R - each output individually adjustable by ±5% from nominal. Factory preset to within 0.5% of specified nominal. **N100** - output 1 adjustable ±5%. Outputs 2, 3 & 5 vary in proportion as output 1 adjusted. With output 1 set to 5.00V and all outputs loaded at 50% of maximum rated current the other outputs will be within 5% of the stated nominal.

Output voltage regulation N90R - each output ±1% maximum total change in voltage for, a zero to full load change on the measured output, the worst case change of load on the other outputs, and a line change of 176 to 264V or 92 to 132V.

N100
LINE REGULATION: Outputs 1, 2 & 4, 0.2% maximum change, outputs 3 & 5, 0.75% max. change, for a line change of 176 to 264V or 92 to 132V - all outputs loaded in proportion to their Imax ratings to give 100W output.
LOAD REGULATION:
Outputs 1 & 4 ±0.5% max. change
Outputs 2 & 3 ±3% max. change.
Output 5 ±2.5% max. change.
for a +45%, -35% load change from 55% Imax. (i.e. from 55% to 20% or 100% max. rated load) on the measured output. All other outputs at 20% max. rated load.
CROSS REGULATION:
Outputs 1 and 4 ±0.1% max. deviation
Outputs 2 and 5 ±1% max. deviation
Output 3 ±1.5% max. deviation
for ±25% change from 75% Imax. on any other output (measured outputs and outputs not being varied set at 20% Imax).

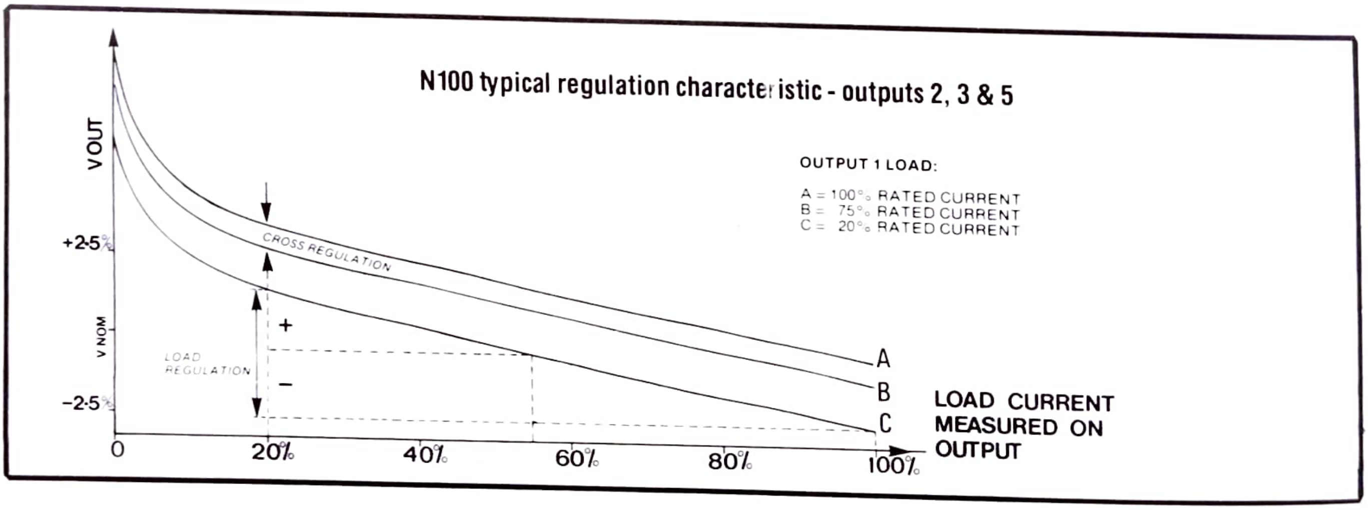

Ripple and noise (with unit delivery max. output power. Δf=30MHz). N90R - not greater than 75mV pk-pk; 20mV r.m.s. N100 - not greater than 2% Vout pk-pk; 0.5% Vout r.m.s.

Temperature coefficient (typical) N90R - All outputs; ±0. 02% per °C N100 - Output 1: ±0.02% per °C. Outputs 2 to 5: ±0.05% per °C.

Output hold-up time All outputs will be maintained for the duration of a missing mains half cycle (18ms from last mains peak) at nominal output voltage, maximum output power and 220V-10% or 115V-10% mains input. At higher input voltages and lower output power the hold-up time is increased as shown in the graph below:

Protection OVERLOAD: Self resetting current limit set to approximately 115% of rated output current.
N90R - all outputs protected. N100 - current limit on outputs 1 and 4 only. Overall power limit at approximately 130% of rated output power. OVERVOLTAGE: N90R - protection provided on each output. N100 - protection provided on output 1.
5V outputs - operates at 5.8V min., 7V max.
12V outputs - operates at 13V min., 16V max.
24V outputs - operates at 26V min., 30V max.
An overvoltage shuts down all outputs. Reset by interrupting the mains supply. FUSE: The mains input is fused (fuse type 20mm 4A T HRC)

Efficiency (at max. output power) N100 - 80% typical. N90R - 70% typical.

Operating ambient temperature range 0°C to 70°C. Derate linearly each output current and the total output power from max. at 50°C to half these values at 70°C.

Storage temperature range - 25°C to 85°C

Radio Frequency Interference The units comply with the conducted interference requirements of VDE0875 curve N and BS800.

Insulation Unit input to output isolation barriers, including layout and wiring, are designed to meet a test of 4kV a.c. r.m.s. for one minute (i.e. 2kV r.m.s. input to earth, 2kV r.m.s. output to earth). Tests are applied to relevant components to ensure compliance with BS3535 clause 17b and CEE15 clause 17c. The complete unit is tested at 2.1kV d.c. for 1 minute between a.c. input and d.c. outputs, with output terminals connected to earth. Tested at 500V d.c. for one minute between output and earth.

Safety specifications Designed and manufactued in accordance with UL478 and BPO Technical Guides 2 and 26 (sections 1.3, 1.3.1. and 2.5.1 respectively).

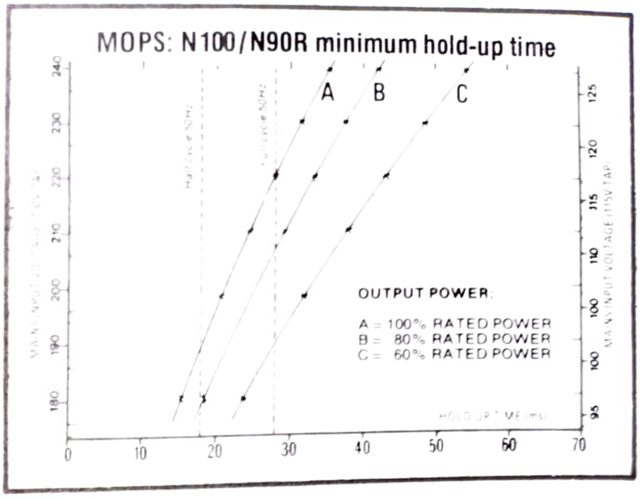

Cover Optional. Available to order

Connections Slotted screw terminals on barrier strip. Three way barrier strip for supply input. Separate barrier strip for outputs (see drawing).

OPERATING INSTRUCTIONS

Warning: Hazardous voltages exist at many points within the unit. It is intended that this power supply be built into the user's equipment and that he provides protection against accidental contact. Where this cannot be done a cover should be fitted which is available to order from Farnell Instruments Ltd. DISCONNECT THE MAINS INPUT SUPPLY BEFORE TOUCHING THE UNIT. If the unit requires servicing it is recommended that it be returned to the manufacturer.

Mains input. The mains input terminals are on the 3-way terminal block at the edge of the circuit board and are marked L (live), N (neutral) and E (earth). The unit as supplied will operate from a 200 to 240V a.c. supply. For operation from 115 to 120V a.c. supplies a link should be fitted between the circuit board pins adjacent to the mains input terminals.
NOTE: The link should only be fitted for low input voltage operation.

Output connections The output connections are on the 8-way terminal block, arranged as shown below:-

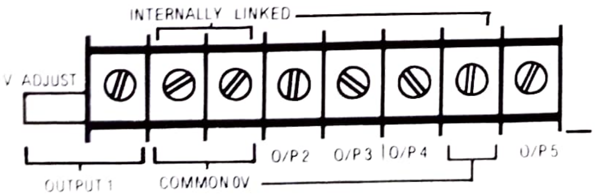

The two left hand common terminals share the current from all outputs. The separate single common terminal can be used to return output 5 current ONLY, if desired. The output voltages and maximum currents are indicated in the specification (reverse of sheet for non-standard units) ...ui ' is necessary to derate the maximum current taken from one or more of the outputs to restrict the total load to the power rating of the unit. For the N90R unit to provide full load current at nominal voltages from outputs 2 to 5, output 1 must be set to 5.0V minimum and have 1A minimum load. The N100 unit requires a minimum load on each output of 20% Imax for the output voltages to remain within specification although the unit may be operated at lighter loads than this.

Output voltage adjustment Output 1 may be varied ±5% from nominal by adjustment of the potentiometer indicated on the diagram.
On the N100 unit this will cause a proportional change in voltage on outputs 2, 3 and 5.
On the N90R all the outputs are fully regulated and outputs 2 to 5 may be individually varied ±5% from nominal by adjustment of the potentiometers indicated below.

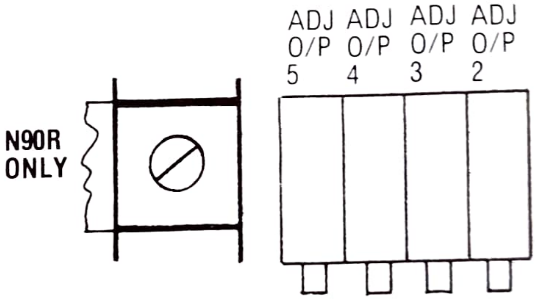

NOTE: Outpui voltages and regulation should be measured directly at the terminal block for the purpose of the specification.

Mounting and ventilation The power supplies are provided with M3 threaded fixing holes in both faces of the 'L' shaped chassis. Fixing screws should not penetrate more than 5mm. Cooling is by natural convection and provision should be made to allow free air flow round the unit.

GUARANTEE & SERVICE

This power supply is guaranteed against defective components or faulty manufacture for a period of 12 months from the date of despatch from Farnell Instruments Ltd or an approved Agent.
We recommend that should it need repair it is returned to The Service Dept. of Farnell Ir ments Ltd or an approved Agent.

CIRCUIT DESCRIPTION

The following is a simplified description of the N90R and N100 units and should be read with reference to the schematic diagram provided.

The filtered and rectified mains input is connected to an inverter transformer switched by a power transistor at about 33kHz. The mains inrush current is limited by a thermistor. Secondary windings on the transformer provide different voltages for the various outputs which are individually rectified and filtered. Feedback is taken from output 1, via an opto-isolator, to control the duty ratio of the power transistor and thereby stabilize this output.

Output 1 load current, via a current transformer is sensed by a comparator and in the event of an overload the current is restricted by controlling the power transistor duty ratio. Similarly an overall power limit is provided by restricting the inverter transformer primary current. If an output over-voltage occurs, the overvoltage trip SCR is triggered, clamping output 2 which reduces all the other output voltages by action of the power limit. The SCR remains in conduction until the mains input supply is interrupted.

On the N100 unit, a cross regulator circuit is connected to output 1 current sense transformer to reduce the voltage variation of outputs 2 to 5 when output 1 load is changed. This is not necessary for the N90R unit since each output is individually stabilized and current limited by regulators. Output 2 uses a switched choke regulator and outputs 2 to 5 use monolithic linear regulators. A low line inhibit circuit prevents the unit supplying full output when the mains input is low.

MECHANICAL DETAILS

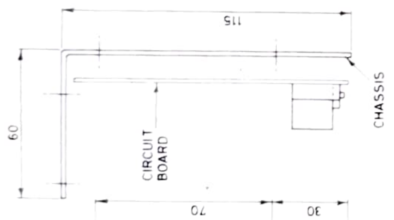

a 8 M3 CAPTIVE FIXINGS MAXIMUM SCREW PENENTRATION 5mm

NOTE

1) CIRCUIT BOARD DIMENSIONS ARE 260×109.

2) TERMINAL BLOCKS USE No 6-32 × 1/4" BINDING HEAD SCREWS.

3) CHASSIS MATERIAL 14swg ALUM. FINISH MATT BLACK.

4 WITH OPTIONAL COVER DIMENSIONS: 262 INCREASES TO 267·4; 115 INCREASES TO 117·7

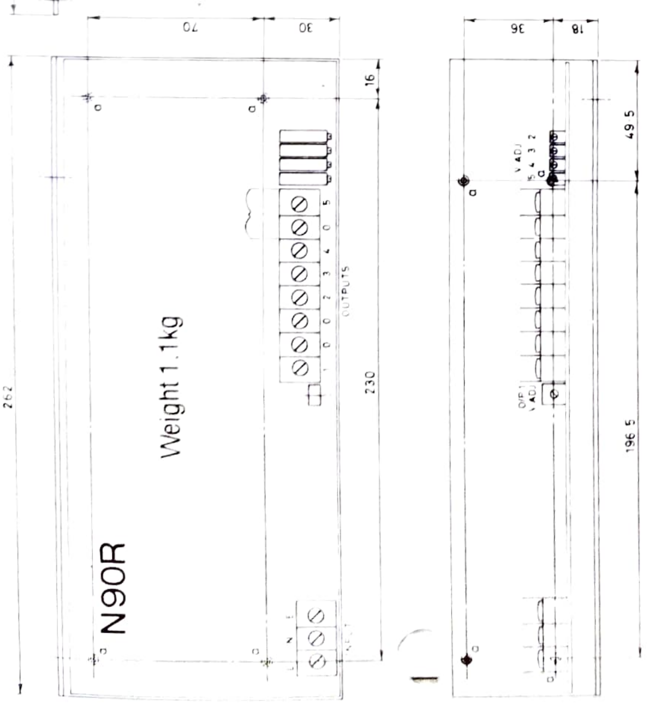

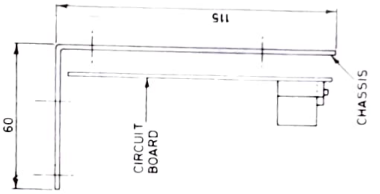

a 8 M3 CAPTIVE FIXINGS MAXIMUM SCREW PENENTRATION 5mm

NOTE

1) CIRCUIT BOARD DIMENSIONS ARE 208×109.

2) TERMINAL BLOCKS USE No 6-32 × 1/4" BINDING HEAD SCREWS

3) CHASSIS MATERIAL 14swg ALUM FINISH MATT BLACK

4) WITH OPTIONAL COVER DIMENSIONS 210 INCREASES TO 215 4; 115 INCREASES TO 117 7

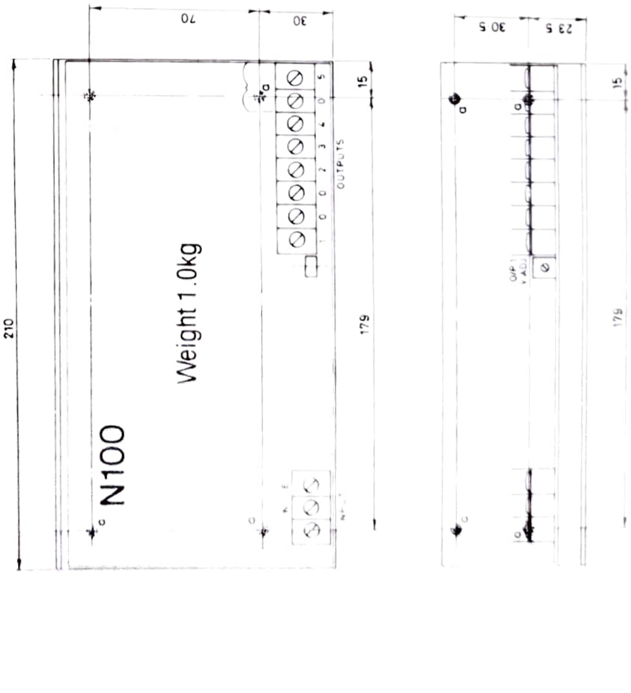

FARNELL INSTRUMENTS LTD. WETHERBY LS22 4DH. TEL 0937 61961

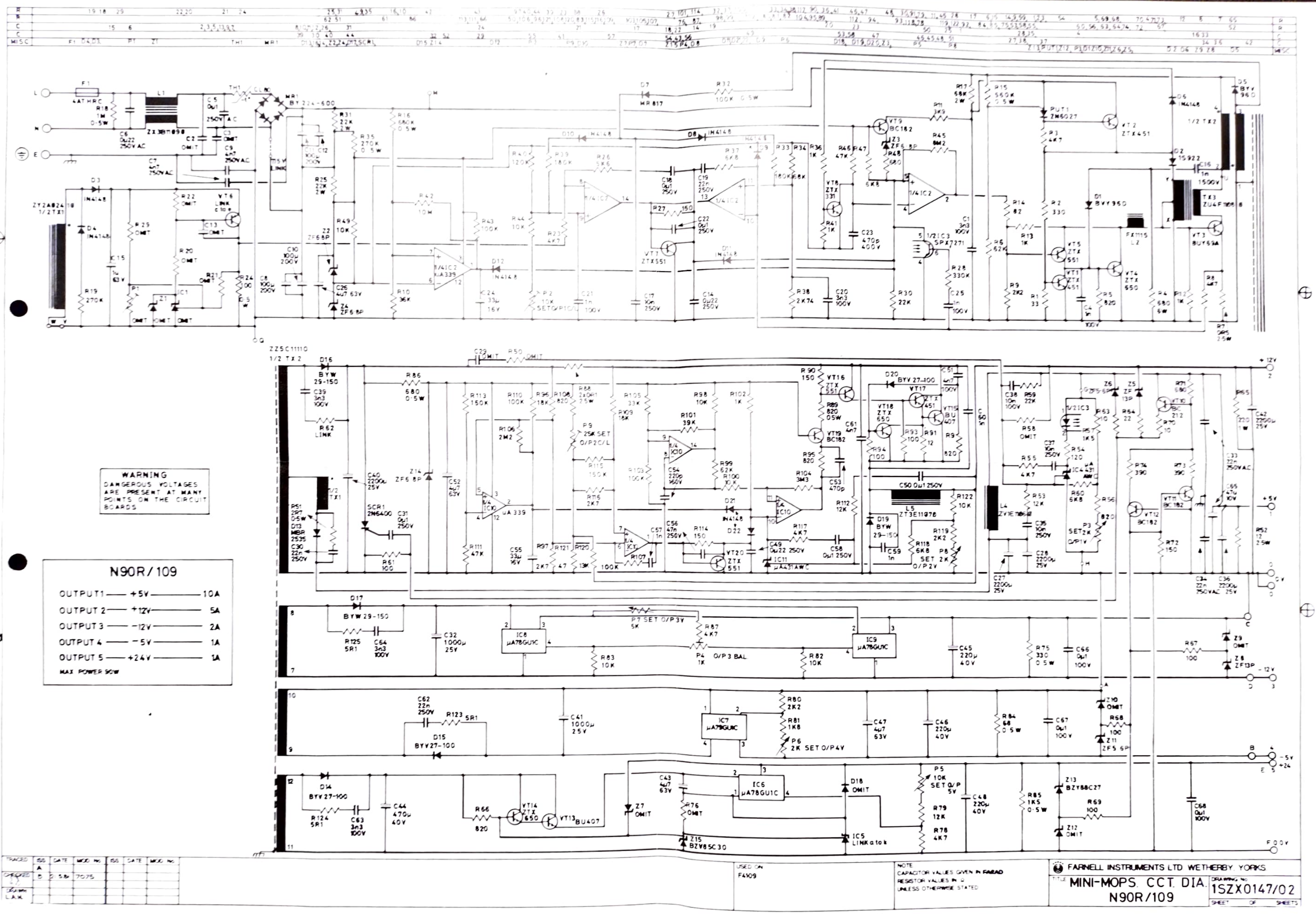
WARNING
DANGEROUS VOLTAGES
ARE PRESENT AT MANY
POINTS ON THE CIRCUIT
BOARDS
N90R/109
OUTPUT 1 — +5V — 10A
OUTPUT 2 — +12V — 5A
OUTPUT 3 — -12V — 2A
OUTPUT 4 — -5V — 1A
OUTPUT 5 — +24V — 1A
MAX POWER 90W
USED ON
F4109
NOTE
CAPACITOR VALUES GIVEN IN FARAD
RESISTOR VALUES IN Ω
UNLESS OTHERWISE STATED
FARNELL INSTRUMENTS LTD WETHERBY YORKS
TITLE MINI-MOPS. CCT. DIA.
N90R/109
DRAWING No 1SZX0147/02
SHEET OF SHEETS
TRACED
CHECKED
DRAWN L.A.W.
ISS DATE MOD No
A
B 2.5.81 7075